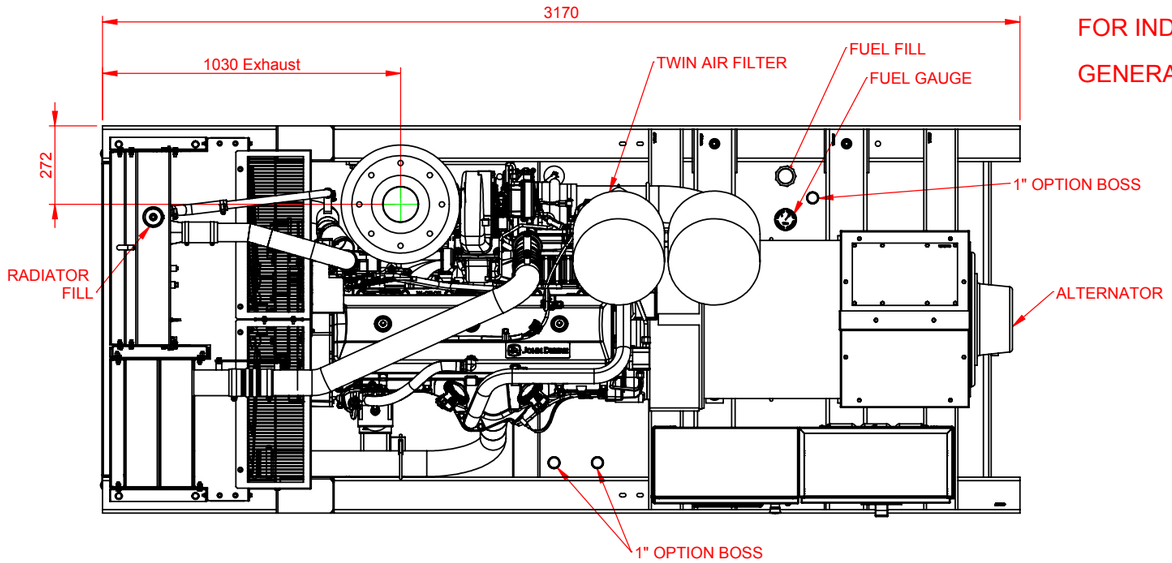

FOR INDIVIDUAL GEN SET MODEL TYPES SEE BROADCROWN LITERATURE

GENERATOR IS TO BE PLACED ON A FLAT FLOOR OR CONCRETE BASE

Model Ref	Engine	Alternator	Oil Capacity	Coolant Capacity	Dry Weight	Wet Weight
BCJD350-60T3/F	6135HF485	HCI444E	58L	47L	4371Kg	4992Kg
BCJD350-60	6135HF485	HCI444E	58L	47L	4371Kg	4992Kg
BCJD405-60T3/F	6135HF485	HCI444F	58L	47L	4507Kg	5128Kg
BCJD405-60	6135HF485	HCI444F	58L	47L	4507Kg	5128Kg

INTEGRAL FUEL CAPACITY = 609 Litres

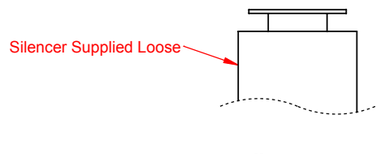

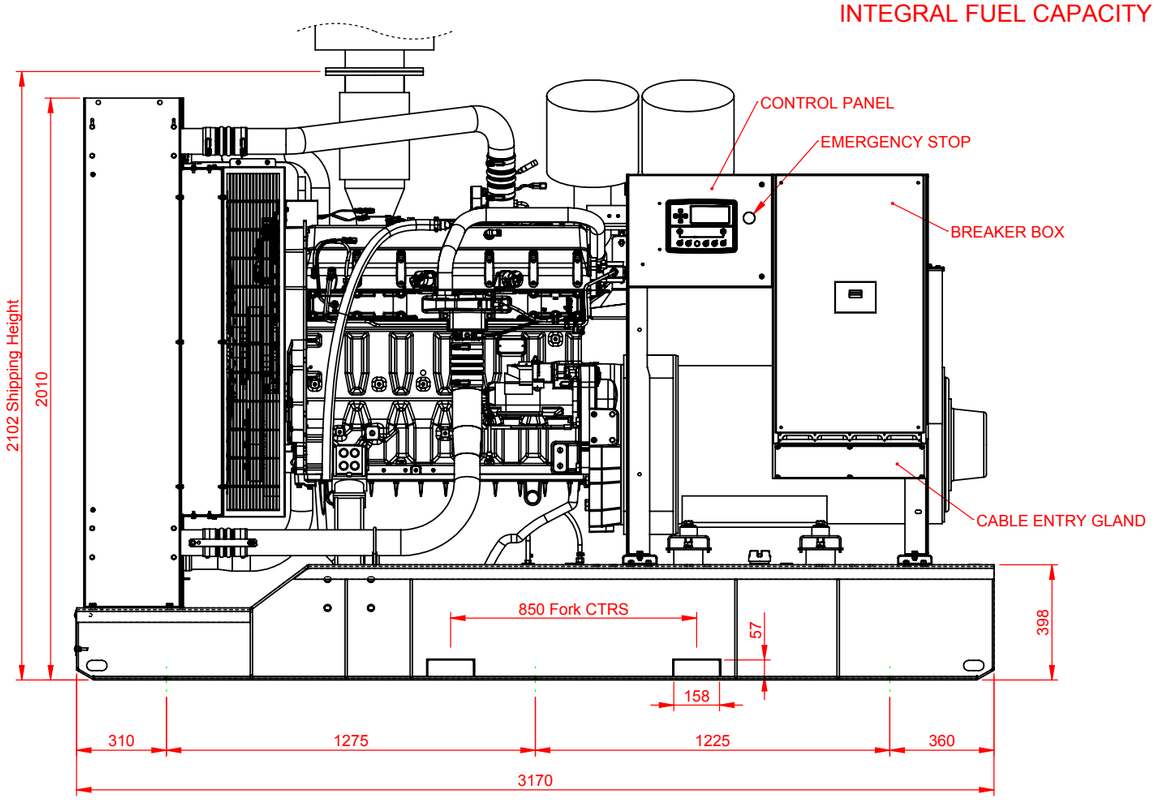

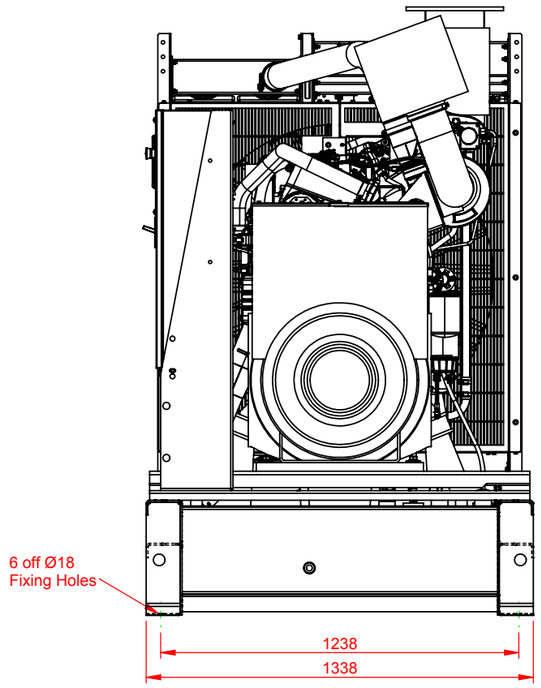

REV	DETAILS	APP'D	DATE
B	Fuel Fittings & Air Filter Added	SJB	28/4/09
C	Bobbins Changed From CAV002 to CAV005	SJB	12/6/09
D	Pipe Bracket Added	SJB	04/8/09
E	Drawing Template Updated	SJB	22/6/10
F	Weights and Volumes Table Added	SJB	17/6/13
G	6135HF475 50Hz RATINGS REMOVED FROM THIS DRAWING, NOW ON JGA167. DRIVELINE HEIGHT RAISED 42mm.		27/03/14 P.R

NOTES - MECHANICAL

TOLERANCES:

GENERAL TOLERANCES: +/- 5mm
FABRICATION: +/- 3mm
HOLE CENTRES: +/- 1mm
OTHER TOLERANCES AS OTHERWISE STATED WHERE REQUIRED

GEOMETRICAL AND OTHER TOLERANCES AS STATED.

THIRD ANGLE PROJECTION

DESCRIPTION

OF8 - 6135HF485 60Hz Sales GA

SHEET 1 of 1	
CREATED BY:	S BEAN
DATE:	31/03/09
MODIFYED BY:	P.RUTTER
DATE:	27/03/14
CHECKED BY:	I.RUTTER
DATE:	27/03/14
ISSUE:	G

DRAWING No:
JGA087

MATERIAL:	
FINISH:	

broadcrown®
Broadcrown Limited (Group Headquarters)
Airfield Industrial Estate, Hixon, Stafford,
ST18 OPF, United Kingdom.
tel: +44 (0) 1889 272200
www.broadcrown.com

ISO 9001 FM 00709

REQUEST A QUOTE
generators@genpowerusa.com

CALL US TODAY
1-888-POWER-58

SHOP ONLINE
www.genpowerusa.com/brands/JOHN-DEERE-Generators