FOR INDIVIDUAL GEN-SET MODEL TYPES SEE BROADCROWN LITERATURE

ENGINE TYPE: 6068TF
ALTERNATOR: UCI274 (UCI274E ILUSTRATED)

USEABLE FUEL CAPACITY: 450L

SHIPPING WEIGHT (WITHOIL): 1986Kg

WET WEIGHT
50.50 GLYCOL & FUEL: 2400Kg

OIL CAPACITY: 19L
COOLANT CAPACITY: 26L

GENERATOR IS TO BE PLACED ON A FLAT FLOOR OR CONCRETE BASE

PLEASE NOTE WEIGHTS MAY VARY DEPENDINGON
ALTERNATOR COMBINATION

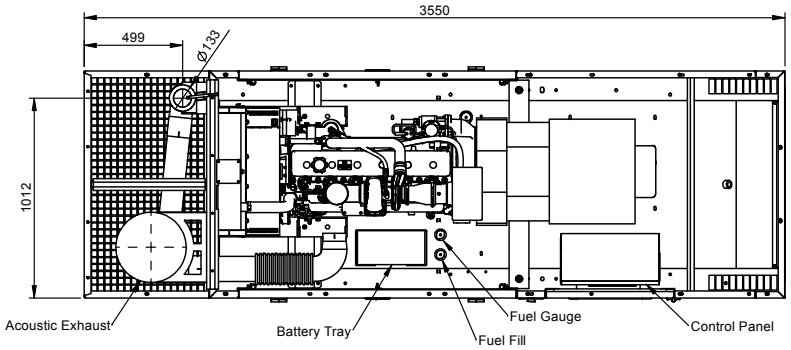

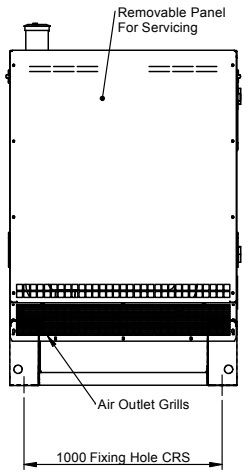

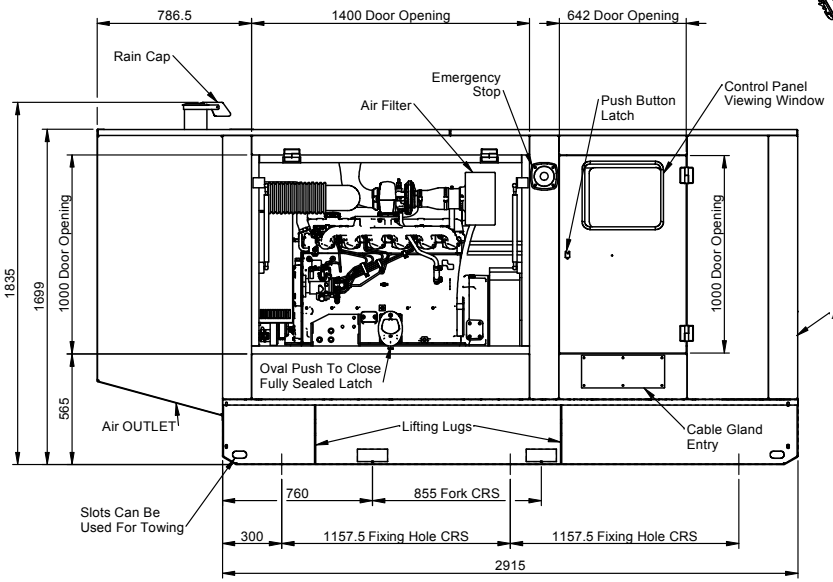

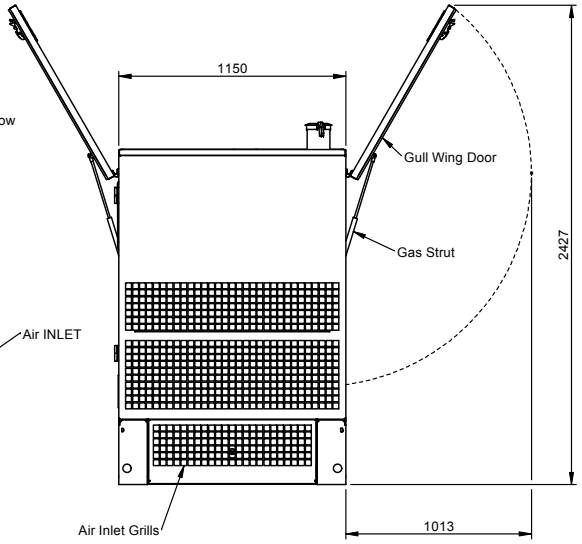

REV	DETAILS	APP'D	DATE
C	Stop Dish Moved Rear & Front Panel Detail Altered	PR	20/10/3
D	Exhaust Detail Changed To Reflect Production Drawings	PR	3/11/3
E	Fuel Capacity Corrected Weights Altered	PR	22/1/4
F	Drawing Updated	SJB	27/5/10

NOTES - MECHANICAL

TOLERANCES:

GENERAL TOLERANCES: +/- 5mm
FABRICATION: +/- 3mm
HOLE CENTRES: +/- 1mm
OTHER TOLERANCES AS OTHERWISE STATED WHERE REQUIRED

GEOMETRICAL AND OTHER TOLERANCES AS STATED.

THIRD ANGLE PROJECTION

DESCRIPTION

JD 6068TF Acoustic Canopy 3

SHEET 1 of 1	
CREATED BY:	P RUTTER
DATE:	
MODIFYED BY:	S BEAN
DATE:	27/05/10
CHECKED BY:	P RUTTER
DATE:	27/05/10
ISSUE:	F

DRAWING No:
JGA006

broadcrown

Broadcrown Limited (Group Headquarters)
Airfield Industrial Estate, Hixon, Stafford,
ST18 0PF, United Kingdom.
tel: +44 (0) 1889 272200
www.broadcrown.com

MATERIAL:	
FINISH:	

REQUEST A QUOTE
generators@genpowerusa.com

CALL US TODAY
1-888-POWER-58

SHOP ONLINE
www.genpowerusa.com/brands/JOHN-DEERE-Generators