THREE PHASE WIRING FOR ASCO® 4000 SERIES TRANSFER SWITCHES TYPES H3ATS & H3NTS RATED 600, 800, 1000 & 1200 AMPERES

GENERAL INFORMATION

THIS WIRING APPLIES TO 300 SERIES TRANSFER SWITCHES THAT UTILIZE THE "G" FRAME POWER TRANSFER SWITCH RATED 1000 – 3000 AMPERES.

THE GROUP G CONTROLLER PROVIDES EITHER AUTOMATIC (D3ATS) OR NON–AUTOMATIC [MANUAL] (D3NTS) OPERATION BASED ON ITS FACTORY SETTING ACCORDING TO THE CUSTOMER ORDER REQUIREMENTS.

THE TYPE OF TRANSFER SWITCH PROVIDED CAN BE DETERMINED FROM THE PRODUCT IDENTIFICATION MARKINGS LOCATED ON BOTH THE POWER TRANSFER SWITCH AND THE COVER OF THE GROUP G CONTROLLER.

ALL OPERATIONAL SETTINGS AND SEQUENCES OF THE GROUP G CONTROLLER AND ITS RELATED OPTIONAL ACCESSORIES (1UP, 18RX, 23G) ARE PROVIDED IN THE USER'S GUIDE, ASCO GROUP G CONTROLLER FOR AUTOMATIC & NON–AUTOMATIC TRANSFER SWITCHES, PART NUMBER 381333–400.

INFORMATION FOR INSTALLATION AND TESTING OF THE TRANSFER SWITCH IS PROVIDED IN THE INSTALLATION MANUAL, ASCO 3ATS & 3NTS, D–DESIGN 1000–3000 A TRANSFER SWITCHES, PART NUMBER 381333–406.

ENGINE CONTROL CONTACTS

FEATURE 7 & FEATURE 8:
ONE SET OF FORM C CONTACTS "NR" (FEAT. 7 N/C, FEAT. 8 N/O) THAT CHANGE POSITION ON EXPIRATION OF THE FEATURE 1C, OVERRIDE MOMENTARY NORMAL SOURCE OUTAGES TIME DELAY, AND RESET ON EXPIRATION OF THE FEATURE 2E ENGINE COOLDOWN TIME DELAY.
AN AUXILIARY CONTACT THAT IS CLOSED WHEN THE TRANSFER SWITCH IS CONNECTED TO THE EMERGENCY SOURCE, IS CONNECTED ACROSS THE N/C CONTACT (FEATURE 7).

AN ADDITIONAL SET OF ENGINE STARTING CONTACTS ARE AVAILABLE ON THE GROUP G CONTROLLER WHEN THE FEATURE SETTING OF THE CONTROLLER OUTPUT CONTACTS "OP1" IS SET TO OPERATE AS "NR2".

ADDITIONAL, OPTIONAL ENGINE STARTING CONTACTS "NR2" ARE AVAILABLE WHEN OPTIONAL ACCESSORY 18RX (RELAY EXPANSION MODULE) IS INCLUDED IN THE TRANSFER SWITCH ASSEMBLY. OUTPUT CONTACTS "OP2" AND/OR "OP3" PROVIDE THE ENGINE STARTING FUNCTION WHEN THE FEATURE SETTING OF EACH IS SET TO OPERATE AS "NR2".

CONTACTS ARE RATED 5 AMPS RESISTIVE AT 30 VDC MAXIMUM, 100 mA AT 5 VDC MINIMUM.

REFER TO USER'S GUIDE, ASCO GROUP G CONTROLLER FOR AUTOMATIC & NON–AUTOMATIC TRANSFER SWITCHES, PART NUMBER 381333–400 FOR SETTING INFORMATION.

LOAD DISCONNECT FEATURE

FEATURE 31: INCLUDES SUB–FEATURES 31F, 31G, 31M, 31N
A SET OF FORM C CONTACTS ARE PROVIDED ON THE GROUP G CONTROLLER AS "OP1". WHEN THE FEATURE SETTING OF "OP1" IS SET TO OPERATE THE CONTACTS AS "FEATURE 31", THE TIME DELAY SETTINGS OF THE SUB–FEATURES ARE AVAILABLE.

"OP1" CAN BE SET TO OPERATE TO PROVIDE THE FOLLOWING FUNCTIONS USING THE TIME DELAY SETTINGS ASSOCIATED WITH EACH SUB–FEATURE;

31F – NORMAL TO EMERGENCY PRE–TRANSFER SIGNAL
31G – EMERGENCY TO NORMAL PRE–TRANSFER SIGNAL
31M – NORMAL TO EMERGENCY POST–TRANSFER SIGNAL
31N – EMERGENCY TO NORMAL POST TRANSFER SIGNAL

THE "OP1" OUTPUT CONTACTS CHANGE POSITION FOLLOWING EACH OF THE ABOVE TIME DELAYS.

ADDITIONAL LOAD DISCONNECT CONTACTS, "FEATURE 31" ARE AVAILABLE WHEN OPTIONAL ACCESSORY 18RX (RELAY EXPANSION MODULE) IS INCLUDED IN THE TRANSFER SWITCH ASSEMBLY. OUTPUT CONTACTS "OP2 AND/OR "OP3" WILL PROVIDE LOAD DISCONNECT FUNCTIONS WHEN THE FEATURE SETTING OF EACH IS SET TO OPERATE AS "FEATURE 31".

ALL OUTPUT CONTACTS ("OP1", "OP2", "OP3") SET TO OPERATE AS "FEATURE 31", SHARE THE COMMON TIME DELAY SETTINGS OF SUB–FEATURES 31F, 31G, 31M, AND 31N.

CONTACTS ARE RATED 5 AMPS RESISTIVE AT 30 VDC MAXIMUM, 100 mA AT 5 VDC MINIMUM.

REFER TO USER'S GUIDE, ASCO GROUP G CONTROLLER FOR AUTOMATIC & NON–AUTOMATIC TRANSFER SWITCHES, PART NUMBER 381333–400 FOR SETTING INFORMATION.

INPHASE TRANSFER FEATURE FOR LOAD TRANSFER

INPHASE TRANSFER CONTROL INITIATES AN INPHASE TRANSFER OF LOADS BETWEEN LIVE SOURCES. THIS IS USED TO PREVENT NUISANCE TRIPPING OF DISTRIBUTION CIRCUIT BREAKERS AND POSSIBLE DAMAGE TO MECHANICAL LOADS ASSOCIATED WITH OUT OF PHASE TRANSFER.

REFER TO USER'S GUIDE, ASCO GROUP G CONTROLLER FOR AUTOMATIC & NON–AUTOMATIC TRANSFER SWITCHES, PART NUMBER 381333–400 FOR SETTING INFORMATION.

SOURCE AVAILABILITY SIGNALS

SIGNALS INDICATING THE AVAILABILITY OF THE NORMAL & EMERGENCY SOURCES IS PROVIDED WHEN OPTIONAL ACCESSORY 18RX (RELAY EXPANSION MODULE) IS INCLUDED IN THE TRANSFER SWITCH ASSEMBLY. OUTPUT CONTACTS "RL5" (EMERGENCY SOURCE AVAILABLE) AND "RL6" (NORMAL SOURCE AVAILABLE) CHANGE POSITION WHEN THE SOURCE IS ACCEPTABLE.

CONTACTS ARE RATED 5 AMPS RESISTIVE AT 30 VDC MAXIMUM, 100 mA AT 5 VDC MINIMUM.

COMMON ALARM & NOT IN AUTO SIGNALING FEATURES

A SET OF FORM C CONTACTS IS PROVIDED ON THE GROUP G CONTROLLER AS "OP1". THE FEATURE SETTING OF "OP1" CAN BE SET TO OPERATE THE CONTACTS AS A "NOT IN AUTO" SIGNAL.

WHEN "OP1" IS SET FOR "NOT IN AUTO", THE OUTPUT CONTACTS CHANGE POSITION WHEN THE TRANSFER IS BEING INHIBITED FROM TRANSFERRING TO THE EMERGENCY SOURCE (FEATURE 34B) OR THE TRANSFER SWITCH HAS BEEN SET FOR NON–AUTOMATIC (MANUAL) OPERATION.

WHEN OPTIONAL ACCESSORY 11BE "SOFTWARE BUNDLE" IS PART OF THE TRANSFER SWITCH ASSEMBLY, "OP1" MAY ALTERNATIVELY SET FOR A "COMMON ALARM" SIGNAL. THE OUTPUT CONTACTS CHANGE POSITION WHEN A "COMMON ALARM" IS NOT PRESENT AND RESET WHEN A "COMMON ALARM" CONDITION IS PRESENT. THE "COMMON ALARM" SIGNAL CONDITIONS ARE SELECTABLE.

ADDITIONAL "COMMON ALARM" AND "NOT IN AUTO" CONTACTS ARE AVAILABLE WHEN OPTIONAL ACCESSORY 18RX (RELAY EXPANSION MODULE) IS INCLUDED IN THE TRANSFER SWITCH ASSEMBLY. OUTPUT CONTACTS "OP2 AND/OR "OP3" WILL PROVIDE SIGNAL FUNCTIONS WHEN THE FEATURE SETTING OF EACH IS SET TO OPERATE AS "COMMON ALARM" OR "NOT IN AUTO".

CONTACTS ARE RATED 5 AMPS RESISTIVE AT 30 VDC MAXIMUM, 100 mA AT 5 VDC MINIMUM.

REFER TO USER'S GUIDE, ASCO GROUP G CONTROLLER FOR AUTOMATIC & NON–AUTOMATIC TRANSFER SWITCHES, PART NUMBER 381333–400 FOR SETTING INFORMATION.

EXTERNAL POWER SUPPLY COMPATIBILITY

USE OF AN EXTERNAL POWER SUPPLY IS USEFUL WHEN REQUIRED TO EXTEND THE FOLLOWING CONTROLLER TIME DELAYS BEYOND 6 SECONDS;

FEATURE 1C – OVERRIDE MOMENTARY NORMAL SOURCE OUTAGES
FEATURE 1F – OVERRIDE MOMENTARY EMERGENCY SOURCE OUTAGES

AN EXTERNAL POWER SUPPLY IS ALSO USEFUL WHEN THE TRANSFER SWITCH IS USED WITH COMMUNICATIONS FEATURES BY ENABLING THE CONTROLLER TO CONTINUE COMMUNICATING.

AN EXTERNAL POWER SOURCE MAY BE PROVIDED TO THE CONTROLLER, UNTIL THE NORMAL SOURCE OR EMERGENCY SOURCE IS AVAILABLE, BY USE OF;

– AN EXTERNAL 24 VDC POWER SUPPLY WITH ACCESSORY 18RX (RELAY EXPANSION MODULE) OR
– OPTIONAL ACCESSORY 1UP (UNINTERRUPTIBLE POWER SUPPLY MODULE)

EXTERNAL 24 VDC POWER SUPPLY "1G":
AN EXTERNAL 24 VDC POWER SUPPLY MAY BE USED TO POWER THE CONTROLLER WHEN ACCESSORY 18RX (RELAY EXPANSION MODULE) IS INCLUDED IN THE TRANSFER SWITCH ASSEMBLY. OUTPUT CONTACTS "OP2" WILL PROVIDE EXTERNAL 24 VDC POWER SUPPLY FUNCTIONALITY WHEN ITS FEATURE SETTING IS SET TO OPERATE AS "1G". ADDITIONALLY, JUMPERS MUST BE RECONFIGURED ON ACCESSORY 18RX (RELAY EXPANSION MODULE) TO ENABLE THIS FUNCTION AS FOLLOWS;

REMOVE JUMPERS "J1" 1–2 & "J1" 3–4
CONNECT JUMPERS "J1" 5–7 & "J1" 6–8

THE OUTPUT CONTACTS CHANGE POSITION WHEN EITHER THE NORMAL SOURCE OR EMERGENCY SOURCE IS AVAILABLE AND RESET WHEN NEITHER SOURCE IS AVAILABLE. THE "OP2" N/C CONTACT SWITCHES CUSTOMER PROVIDED +24 VDC FROM THE EXTERNAL POWER SUPPLY TO THE CONTROLLER.

REFER TO USER'S GUIDE, ASCO GROUP G CONTROLLER FOR AUTOMATIC & NON–AUTOMATIC TRANSFER SWITCHES, PART NUMBER 381333–400 FOR SETTING INFORMATION.

ACCESSORY 1UP (UNINTERRUPTIBLE POWER SUPPLY):
WHEN OPTIONAL ACCESSORY 1UP IS INCLUDED IN THE TRANSFER SWITCH ASSEMBLY, THE CONTROLLER IS PROVIDED WITH LIMITED RESERVE POWER (APPROXIMATELY 3 MINUTES).

LOAD CURRENT METERING

WHEN OPTIONAL ACCESSORY 23GB IS PART OF THE TRANSFER SWITCH ASSEMBLY, THREE PHASE CURRENT MEASUREMENTS ARE AVAILABLE FOR DISPLAY ON THE GROUP G CONTROLLER.

REFER TO USER'S GUIDE, ASCO GROUP G CONTROLLER FOR AUTOMATIC & NON–AUTOMATIC TRANSFER SWITCHES, PART NUMBER 381333–400 FOR INFORMATION ON USE.

FOUR-FUNCTION SOFTWARE BUNDLE

WHEN OPTIONAL ACCESSORY 11BE IS PART OF THE TRANSFER SWITCH ASSEMBLY, A FOUR–FUNCTION SOFTWARE BUNDLE IS AVAILABLE TO PERFORM THE FOLLOWING FUNCTIONS;

– SERIAL COMMUNICATIONS (RS–485)
– PROGRAMMABLE ENGINE EXERCISER
– EVENT LOG
– COMMON ALARM SIGNAL CAPABILITY ON GROUP G CONTROLLER "OP1" OUTPUT.

REFER TO USER'S GUIDE, ASCO GROUP G CONTROLLER FOR AUTOMATIC & NON–AUTOMATIC TRANSFER SWITCHES, PART NUMBER 381333–400 FOR INFORMATION ON THESE FUNCTIONS.

NON-AUTOMATIC (MANUAL) OPERATION

TRANSFER SWITCH ASSEMBLIES FACTORY SET FOR NON–AUTOMATIC OPERATION PROVIDE USER INITIATED, ELECTRICAL OPERATION OF THE TRANSFER SWITCH TO EITHER AVAILABLE SOURCE. THE TRANSFER SWITCH ASSEMBLY IS PHYSICALLY IDENTICAL TO THAT OF THE AUTOMATIC TYPE.

WHEN THE TRANSFER SWITCH IS SET FOR NON–AUTOMATIC OPERATION, A CUSTOMER PROVIDED SELECTOR SWITCH MAY BE USED TO OPERATE IT FROM A REMOTE LOCATION.

REMOTE CONTROL FEATURES

THE FOLLOWING CONTROL PANEL INPUTS PROVIDE REMOTE CONTROL FUNCTIONS FOR THE TRANSFER SWITCH. EACH FUNCTION CAN BE IMPLEMENTED BY THE CUSTOMER PROVIDING THE FORM OF CONTROL DESCRIBED. EACH CONTROL CONTACT MUST BE SUITABLE FOR A 5 VDC LOW ENERGY CIRCUIT.

EXTERNAL FEATURE 17: REMOTE TRANSFER TO EMERGENCY FEATURE (FOR AUTOMATIC TRANSFER TYPE ONLY) – REQUIRES A CUSTOMER SUPPLIED, NORMALLY CLOSED CONTACT. OPENING OF THE CONTACT CAUSES ENGINE START AND TRANSFER TO THE EMERGENCY SOURCE. RE–CLOSURE OF THE CONTACT ACTIVATES THE FEATURE 3A "RETRANSFER TO NORMAL (IF JUST TEST) TIME DELAY PRIOR TO RETRANSFER. IN THE EVENT THAT THE EMERGENCY SOURCE FAILS WHILE THE TRANSFER SWITCH IS CONNECTED TO EMERGENCY AND THE CUSTOMER SUPPLIED CONTACT IS OPEN, THE TRANSFER SWITCH WILL AUTOMATICALLY RETRANSFER TO THE NORMAL SOURCE.

EXTERNAL FEATURE 6B: REMOTE BYPASS OF RETRANSFER TO NORMAL TIME DELAY – REQUIRES A CUSTOMER SUPPLIED, NORMALLY CLOSED CONTACT. OPENING OF THE CONTACT BYPASSES FEATURE 3A RETRANSFER TO NORMAL DELAY IF ACTIVE.

REFER TO USER'S GUIDE, ASCO GROUP G CONTROLLER FOR AUTOMATIC & NON–AUTOMATIC TRANSFER SWITCHES, PART NUMBER 381333–400 FOR SETTING INFORMATION.

NOTES

1. SWITCH SHOWN DE–ENERGIZED CONNECTED TO NORMAL SOURCE.
2. DEVICE SYMBOLS AND DESIGNATIONS ARE IN ACCORDANCE WITH NEMA PUB. ICS 1, PART 1–101A.
2. ALL WIRING IS #16 AWG, TINNED, STRANDED COPPER UNLESS OTHERWISE INDICATED.
3. O INDICATES CUSTOMER CONNECTION POINTS.
4. ● INDICATES FACTORY CONNECTION POINTS.
5. CONNECTION POINTS THAT HAVE BOTH CUSTOMER CONNECTIONS AND FACTORY CONNECTIONS ARE SHOWN OPEN AS CUSTOMER CONNECTION POINTS.
6. THE TRANSFER UNIT IS MOUNTED ON THE BACK INSIDE SURFACE OF THE ENCLOSURE. THE CONTROL PANEL AND ANY OPTIONAL ACCESSORIES ARE MOUNTED ON THE INSIDE SURFACE OF THE DOOR.
7. AN OPERATOR'S MANUAL IS FURNISHED WITH EACH AUTOMATIC TRANSFER SWITCH. REFER TO THIS PUBLICATION PRIOR TO INSTALLATION AND OPERATION OF THE SWITCH.
8. GROUND STRAP ON CONTROL PANEL IS AFFIXED TO CHASSIS (ENCLOSURE) AT LOWER LEFT CONTROL PANEL MOUNTING STUD.

BASE CATALOG NUMBER					CATALOG NUMBER SUFFIXES			
TS FRAME	CATALOG TYPE	NEUTRAL TYPE	PHASE POLES	AMPS	VOLT CODE	CONTROLLER	OPTIONAL ACCESSORY	ENCLOSURE CODE
H	3ATS 3NTS	A B BLANK FOR NONE	3	600 800 1000 1200	C D E F H J K L M N P Q R	5	X BLANK FOR NONE	C E F G H J K L M N P Q BLANK FOR OPEN TYPE

EXPLANATION OF CATALOG NUMBER CODES

CATALOG TYPE		NEUTRAL TYPE		VOLTAGE CODES 3 PHASE (3 OR 4 WIRE) 50 OR 60 Hz		ENCLOSURE CODES		
CODE	DESCRIPTION	CODE	DESCRIPTION	CODE	NOMINAL VOLTAGE	CODE	TYPE	DESCRIPTION
3ATS 3NTS	AUTOMATIC MANUAL	BLANK A B C	NONE SOLID SWITCHING OVERLAPPING	C D E F H J K L M N P Q R	208 220 230 240 380 400 415 440 460 480 550 575 600	BLANK C E F G H J K L M N P Q	 1 2 3R 4 4X 4X 7 12 3R 4 4X 12	OPEN TYPE (NO ENCLOSURE) GENERAL PURPOSE, INDOOR INDOOR, WATER & DUST RESISTANT OUTDOOR, RAINPROOF, SLEET & ICE RESISTANT INDOOR/OUTDOOR, WATERTIGHT & DUSTTIGHT TYPE 4 PLUS CORROSION RESISTANCE (STAINLESS STEEL) TYPE 4 PLUS CORROSION RESISTANCE (FIBERGLASS) EXPLOSION PROOF INDOOR, INDUSTRIAL ENVIRONMENTS, OILTIGHT & DUSTTIGHT (SECURE ENCLOSURES) OUTDOOR, RAINPROOF, SLEET & ICE RESISTANT INDOOR/OUTDOOR, WATERTIGHT & DUSTTIGHT TYPE 4 PLUS CORROSION RESISTANCE (STAINLESS STEEL) INDOOR, INDUSTRIAL ENVIRONMENTS, OILTIGHT & DUSTTIGHT

CATALOG NUMBER _____
ASCO® CERTIFIED TO
S.O. _____
BY _____
DATE _____

FORM REV –

REV. TO SHEET	ECN NO.	BY	APP.	DATE
—	245204	BK	BK	11/07/13
	ISSUE			

PROJECT NAME:
WIRING DIAGRAM
300 SERIES (H3ATS/H3NTS) 3PH 600–1200 AMPS
"H" FRAME, GROUP G CONTROLS

THIRD ANGLE PROJECTION

	BY	DATE
DRAWN BY	DJB	11/07/13
CHECKED	BK	11/07/13
PROJECT APPROVAL	BK	11/07/13
FINAL APPROVAL		

MANUFACTURING TOLERANCES TO BE IN ACCORDANCE WITH ASCO PROCEDURE MP–I–003. FOR PLASTIC PARTS SEE MP–I–055

ASSEM. REF. NO.

PROPERTY OF ASCO POWER TECHNOLOGIES. USE PERMITTED FOR OUR WORK ONLY. ALL RIGHTS OF DESIGN OR INVENTION ARE RESERVED.

ASCO® ASCO POWER TECHNOLOGIES, L.P.
FLORHAM PARK, NEW JERSEY 07932 U.S.A.

COMPUTER GENERATED DRAWING
SCALE NONE SIZE DS
DWG. NO. 1001657
DRAWING REV. – ECN NO. 245204 SHEET 1 OF 6

FIELD CONNECTIONS

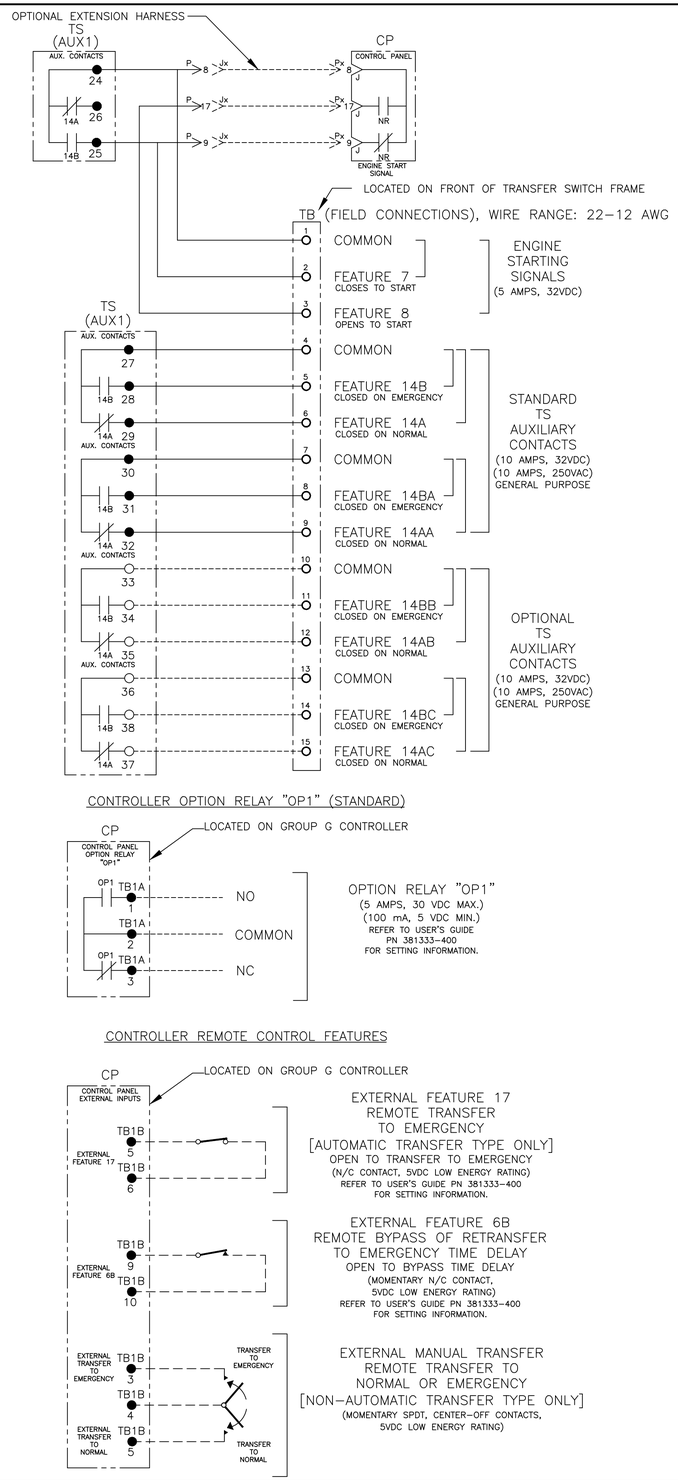

CONTROLLER OPTION RELAY "OP1" (STANDARD)

CONTROLLER REMOTE CONTROL FEATURES

OPTIONAL ACCESSORY 18RX (RELAY EXPANSION MODULE)

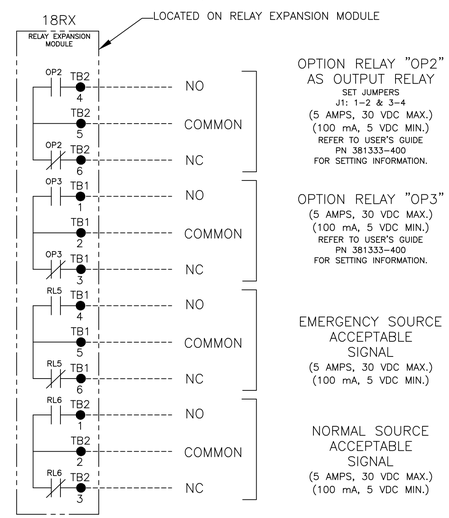

"OP2" OPTIONAL USES

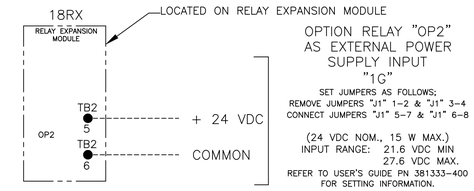

OPTIONAL ACCESSORY 18RX1 (SECOND RELAY EXPANSION MODULE)

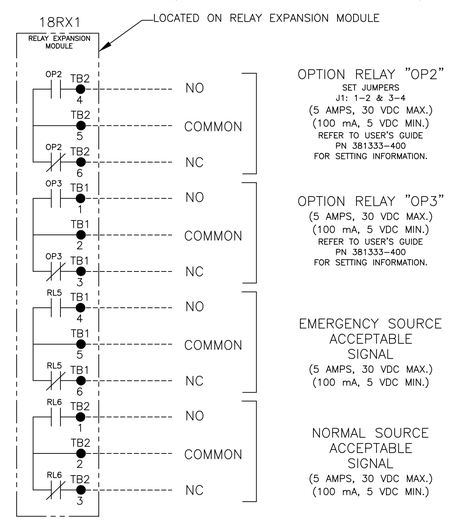

REV. TO SHEET	ECN NO.	BY	APP.	DATE
—	245204	BK	BK	11/07/13
	ISSUE			

PROJECT NAME:

WIRING — DIAGRAM

300 SERIES (H3ATS/H3NTS) 3PH 600–1200 AMPS
"H" FRAME, GROUP G CONTROLS

THIRD ANGLE PROJECTION

	BY	DATE
DRAWN BY	DJB	11/07/13
CHECKED	BK	11/07/13
PROJECT APPROVAL	BK	11/07/13
FINAL APPROVAL		

MANUFACTURING TOLERANCES TO BE IN ACCORDANCE WITH ASCO PROCEDURE MP–I–003. FOR PLASTIC PARTS SEE MP–I–005

ASSEM. REF. NO.

PROPERTY OF ASCO POWER TECHNOLOGIES. USE PERMITTED FOR OUR WORK ONLY. ALL RIGHTS OF DESIGN OR INVENTION ARE RESERVED.

ASCO® ASCO POWER TECHNOLOGIES, L.P.
FLORHAM PARK, NEW JERSEY 07932 U.S.A.

COMPUTER GENERATED DRAWING

SCALE NONE | SIZE DS

DWG. NO. 1001657

DRAWING REV. — | ECN NO. 245204 | SHEET 2 OF 6

CALL US TODAY
1-888-POWER-58
REQUEST A QUOTE
parts@genpowerusa.com
SHOP ONLINE
www.genpowerusa.com

MAIN POWER POLES

TS OPERATOR CIRCUIT

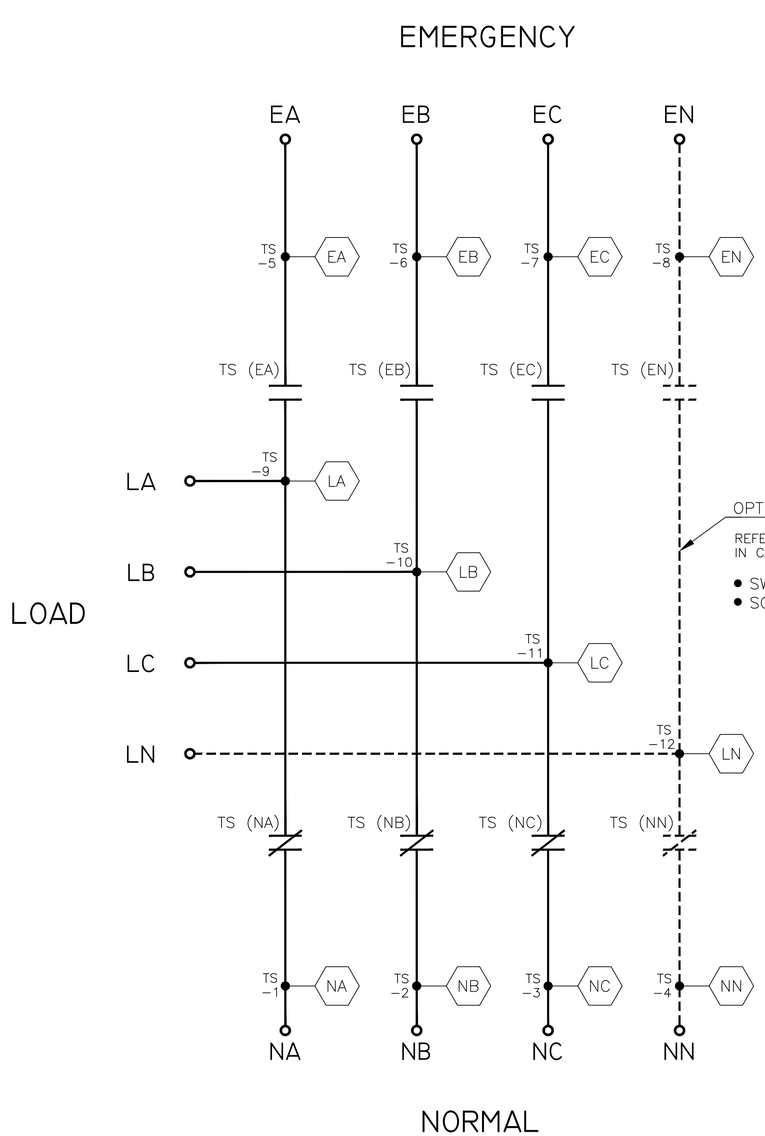

OPTIONAL NEUTRAL TYPES

REFER TO "EXPLANATION OF CATALOG NUMBER CODES" IN CATALOG NUMBER CHART ON SHEET 1.

- SWITCHING CONTACTS
- SOLID BUS PLATE

NOTE:
ATS/NTS SHOWN CLOSED ON NORMAL SOURCE.

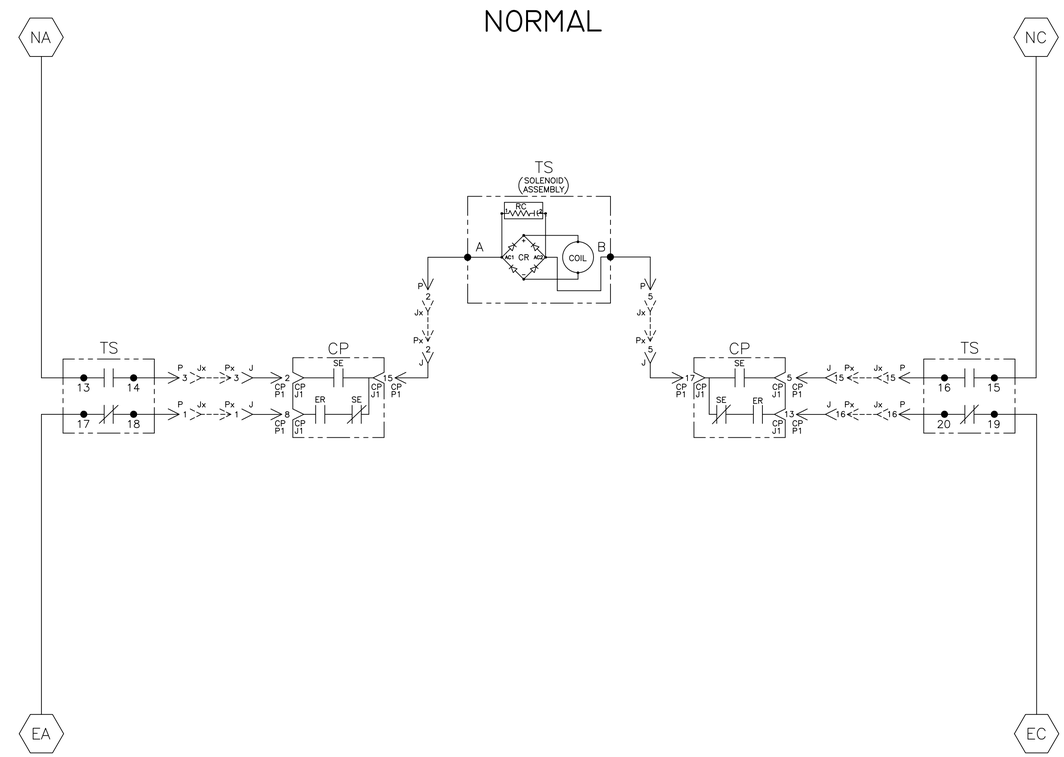

TS CONTROL CONTACTS						
TS	SOLENOID POSITION					
	CLOSED NORMAL	BEFORE TDC>	>	<	BEFORE <TDC	CLOSED EMERG.
13–14					X	X
15–16					X	X
17–18	X	X				
19–20	X	X				

TDC (TOP DEAD CENTER)
TRANSFER SWITCH TEST & ADJUSTMENT PROCEDURE SPECIFIES CONTROL CUT–OFF (CONTACT OPENING) SETTING.

REV. TO SHEET	ECN NO.	BY	APP.	DATE
—	245204	BK	BK	11/07/13
	ISSUE			

PROJECT NAME:

WIRING DIAGRAM

300 SERIES (H3ATS/H3NTS) 3PH 600–1200 AMPS
"H" FRAME, GROUP G CONTROLS

THIRD ANGLE PROJECTION

	BY	DATE
DRAWN BY	DJB	11/07/13
CHECKED	BK	11/07/13
PROJECT APPROVAL	BK	11/07/13
FINAL APPROVAL		

MANUFACTURING TOLERANCES TO BE IN ACCORDANCE WITH ASCO PROCEDURE MP–I–003. FOR PLASTIC PARTS SEE MP–I–055

ASSEM. REF. NO.

PROPERTY OF ASCO POWER TECHNOLOGIES. USE PERMITTED FOR OUR WORK ONLY. ALL RIGHTS OF DESIGN OR INVENTION ARE RESERVED.

ASCO® ASCO POWER TECHNOLOGIES, L.P.
FLORHAM PARK, NEW JERSEY 07932 U.S.A.

COMPUTER GENERATED DRAWING

SCALE NONE | SIZE DS

DWG. NO. 1001657

DRAWING REV. — | ECN NO. 245204 | SHEET 3 OF 6

CALL US TODAY
1-888-POWER-58

REQUEST A QUOTE
parts@genpowerusa.com

SHOP ONLINE
www.genpowerusa.com

EMERGENCY SOURCE CIRCUITS

EMERGENCY

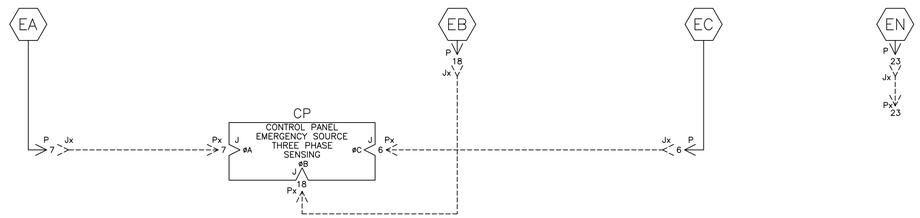

LOAD TERMINAL CIRCUITS

LOAD

NORMAL SOURCE CIRCUITS

NORMAL

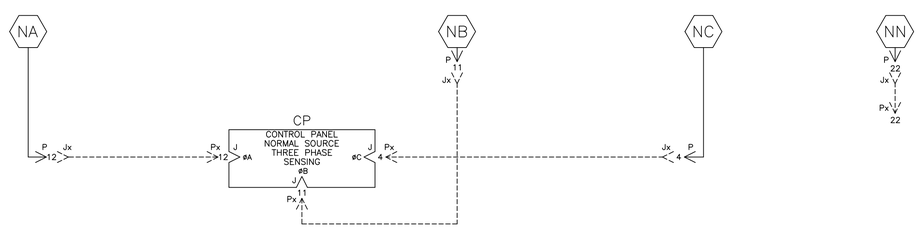

CONTROL CIRCUITS

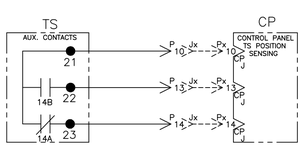

ADDITIONAL CIRCUITS

OPTIONAL ACCESSORY 23GB (LOAD CURRENT METERING)

CURRENT TRANSFORMER RATIO TABLE	
SWITCH RATING	CT RATIO
600A	600:5A
800A	800:5A
1000A	1200:5A
1200A	1200:5A

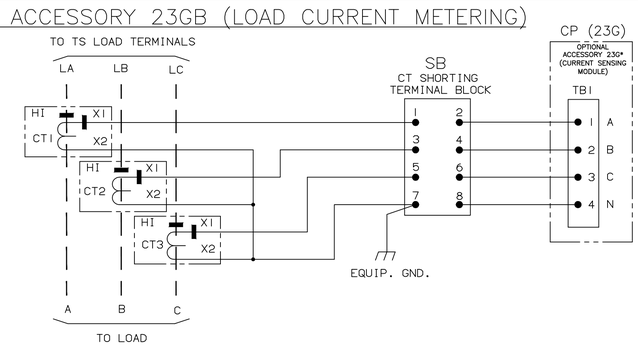

REV. TO SHEET	ECN NO.	BY	APP.	DATE
—	245204	BK	BK	11/07/13

ISSUE

PROJECT NAME:

WIRING DIAGRAM

300 SERIES (H3ATS/H3NTS) 3PH 600–1200 AMPS
"H" FRAME, GROUP G CONTROLS

THIRD ANGLE PROJECTION

	BY	DATE
DRAWN BY	DJB	11/07/13
CHECKED	BK	11/07/13
PROJECT APPROVAL	BK	11/07/13
FINAL APPROVAL		

MANUFACTURING TOLERANCES TO BE IN ACCORDANCE WITH ASCO PROCEDURE MP-I-003. FOR PLASTIC PARTS SEE MP-I-055

ASSEM. REF. NO.

PROPERTY OF ASCO POWER TECHNOLOGIES. USE PERMITTED FOR OUR WORK ONLY. ALL RIGHTS OF DESIGN OR INVENTION ARE RESERVED.

ASCO® ASCO POWER TECHNOLOGIES, L.P.
FLORHAM PARK, NEW JERSEY 07932 U.S.A.

COMPUTER GENERATED DRAWING

SCALE NONE | SIZE DS

DWG. NO. 1001657

DRAWING REV. — | ECN NO. 245204 | SHEET 4 OF 6

CALL US TODAY
1-888-POWER-58
REQUEST A QUOTE
parts@genpowerusa.com
SHOP ONLINE
www.genpowerusa.com

PHYSICAL DIAGRAM

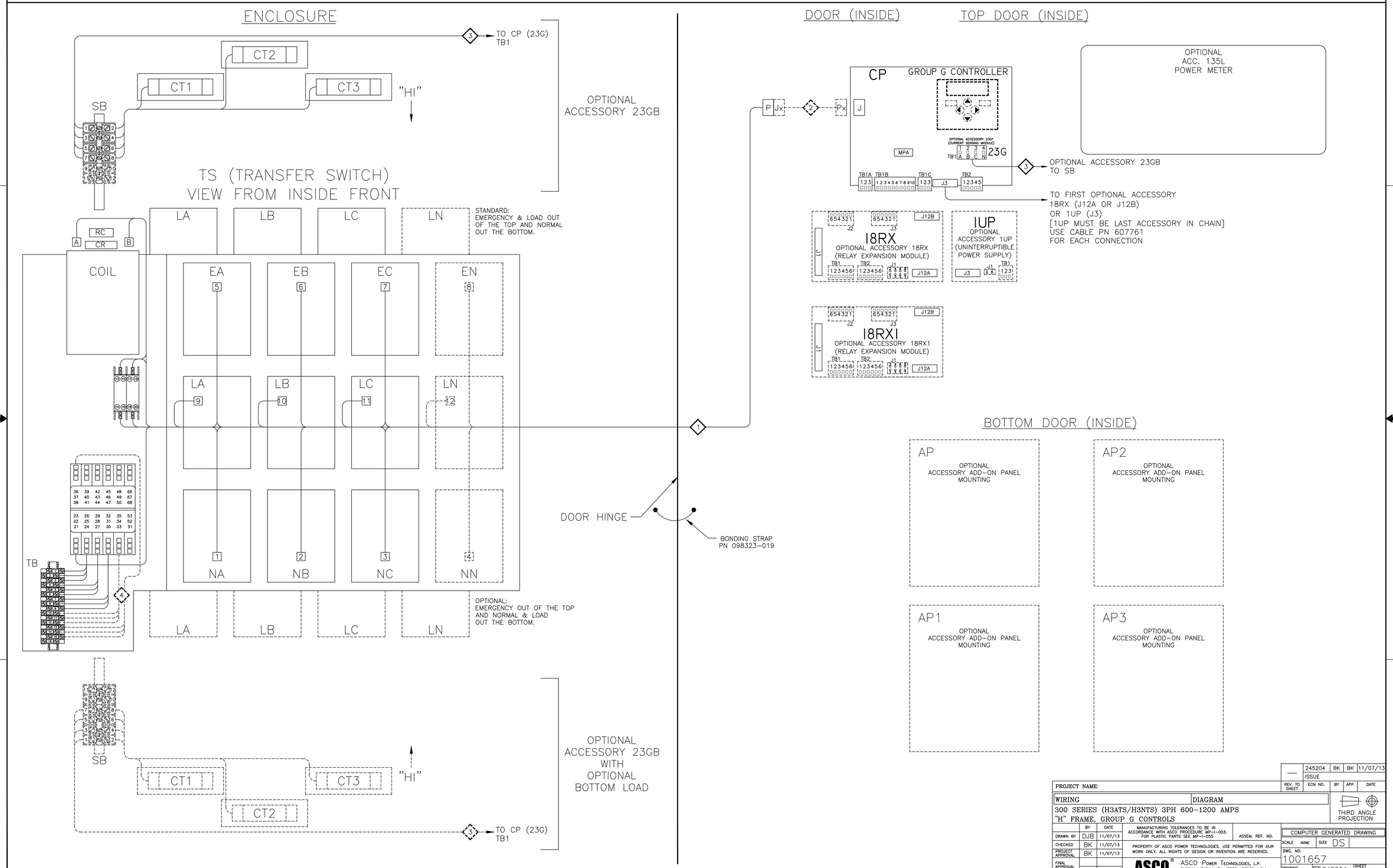

REV. TO SHEET	ECN NO.	BY	APP.	DATE
—	245204	BK	BK	11/07/13
	ISSUE			

PROJECT NAME:

WIRING DIAGRAM

300 SERIES (H3ATS/H3NTS) 3PH 600-1200 AMPS
"H" FRAME, GROUP G CONTROLS

THIRD ANGLE PROJECTION

	BY	DATE
DRAWN BY	DJB	11/07/13
CHECKED	BK	11/07/13
PROJECT. APPROVAL	BK	11/07/13
FINAL APPROVAL		

MANUFACTURING TOLERANCES TO BE IN ACCORDANCE WITH ASCO PROCEDURE MP-I-003. FOR PLASTIC PARTS SEE MP-I-055

ASSEM. REF. NO.

PROPERTY OF ASCO POWER TECHNOLOGIES. USE PERMITTED FOR OUR WORK ONLY. ALL RIGHTS OF DESIGN OR INVENTION ARE RESERVED.

ASCO® ASCO POWER TECHNOLOGIES, L.P. FLORHAM PARK, NEW JERSEY 07932 U.S.A.

COMPUTER GENERATED DRAWING

SCALE NONE SIZE DS

DWG. NO. 1001657

DRAWING REV. — ECN NO. 245204 SHEET 5 OF 6

CALL US TODAY
1-888-POWER-58

REQUEST A QUOTE
parts@genpowerusa.com

SHOP ONLINE
www.genpowerusa.com

WIRE RUN LISTING

1 — HARNESS LOCATOR

BOX CHECKED IF HARNESS IS MODIFIED ☒

WIRE No.	HARNESS 713082 (P) MAIN TS	CLR	AWG
1	P-1,TS-18		16
2	P-2,TS-A		
3	P-3,TS-14		
4	P-4,TS-3		
4	TS-3,TS-15		
5	P-5,TS-B		
6	P-6,TS-7		
6	TS-7,TS-19		
7	P-7,TS-5		
7	TS-5,TS-17		
8	P-8,TS-24		
8	TS-24,TB-1		
9	P-9,TS-25		
9	TS-25,TB-2		
10	P-10,TS-21		
11	P-11,TS-2		
12	P-12,TS-1		
12	TS-1,TS-13		
13	P-13,TS-22		
14	P-14,TS-23		
15	P-15,TS-16		
16	P-16,TS-20		
17	P-17,TB-3		
18	P-18,TS-6		
19	P-19,TS-9		
20	P-20,TS-10		
21	P-21,TS-11		
22	P-22,TS-4		
23	P-23,TS-8		
24	P-24,TS-12		
25	TS-27,TB-4		
26	TS-28,TB-5		
27	TS-29,TB-6		
	ADD WIRES		
31	TS-30,TB-7		
32	TS-31,TB-8		
33	TS-32,TB-9		

2 — HARNESS LOCATOR

BOX CHECKED IF HARNESS IS MODIFIED ☐

WIRE No.	HARNESS 309320-005 (Px,Jx OPTIONAL 8" EXTENSION HARNESS)	CLR	AWG
1	Px-1,Jx-1		16
2	Px-2,Jx-2		
3	Px-3,Jx-3		
4	Px-4,Jx-4		
5	Px-5,Jx-5		
6	Px-6,Jx-6		
7	Px-7,Jx-7		
8	Px-8,Jx-8		
9	Px-9,Jx-9		
10	Px-10,Jx-10		
11	Px-11,Jx-11		
12	Px-12,Jx-12		
13	Px-13,Jx-13		
14	Px-14,Jx-14		
15	Px-15,Jx-15		
16	Px-16,Jx-16		
17	Px-17,Jx-17		
18	Px-18,Jx-18		
19	Px-19,Jx-19		
20	Px-20,Jx-20		
21	Px-21,Jx-21		
22	Px-22,Jx-22		
23	Px-23,Jx-23		
24	Px-24,Jx-24		
	REMOVE WIRES		
	ADD WIRES		

3 — HARNESS LOCATOR

WIRE No.	OPTIONAL ACCESSORY 23GB (CT,SB,CP(23G)-TB1)	CLR	AWG
300	CT1-X1,SB-1		16
301	CT2-X1,SB-3		
302	CT3-X1,SB-5		
300	SB-2,CP(23G)-TB1-1		
301	SB-4,CP(23G)-TB1-2		
302	SB-6,CP(23G)-TB1-3		
303	CT1-X2,CT2-X2	GRN	
303	CT2-X2,CT3-X2	GRN	
303	CT3-X2,SB-7	GRN	
303	SB-7,EQUIP-GND	GRN	
303	SB-8,CP(23G)-TB1-4	GRN	

4 — HARNESS LOCATOR

BOX CHECKED IF HARNESS IS MODIFIED ☐

WIRE No.	OPTIONAL AUX. CONTACTS	CLR	AWG
35	TB-10,TS(AUX1)-33		16
36	TB-11,TS(AUX1)-34		
37	TB-12,TS(AUX1)-35		
38	TB-13,TS(AUX1)-36		
39	TB-14,TS(AUX1)-38		
40	TB-15,TS(AUX1)-37		

ADDITIONAL WIRES

WIRE No.	ADDITIONAL WIRES	CLR	AWG
			16

REV. TO SHEET	ECN NO.	BY	APP.	DATE
—	245204	BK	BK	11/07/13

ISSUE

PROJECT NAME:

WIRING DIAGRAM

300 SERIES (H3ATS/H3NTS) 3PH 600-1200 AMPS
"H" FRAME, GROUP G CONTROLS

THIRD ANGLE PROJECTION

	BY	DATE
DRAWN BY	DJB	11/07/13
CHECKED	BK	11/07/13
PROJECT APPROVAL	BK	11/07/13
FINAL APPROVAL		

MANUFACTURING TOLERANCES TO BE IN ACCORDANCE WITH ASCO PROCEDURE MP-I-003. FOR PLASTIC PARTS SEE MP-I-055

ASSEM. REF. NO.

PROPERTY OF ASCO POWER TECHNOLOGIES. USE PERMITTED FOR OUR WORK ONLY. ALL RIGHTS OF DESIGN OR INVENTION ARE RESERVED.

ASCO® ASCO POWER TECHNOLOGIES, L.P. FLORHAM PARK, NEW JERSEY 07932 U.S.A.

COMPUTER GENERATED DRAWING

SCALE NONE | SIZE DS

DWG. NO. 1001657

DRAWING REV. — | ECN NO. 245204 | SHEET 6 OF 6

CALL US TODAY
1-888-POWER-58

REQUEST A QUOTE
parts@genpowerusa.com

SHOP ONLINE
www.genpowerusa.com